antenna conceptor

Product Datasheet

2J6726B

IRIDIUM Screw Mount

Key Features

IRIDIUM
- 1616-1627 MHz
Screw Mount
Iridium Certified
Ground Plane Independent
Customizable Cable and Connector
Dimensions Ø 77.3 × 36.5 mm
Certificates IP67, IP69K, IK09

1. Antenna and electrical specifications

Parameters	IRIDIUM Antenna
Standards	Iridium
Bands (MHz)	1621
Frequency (MHz)	1616-1627
Return Loss (dB)	~-18.8
VSWR	~1.2:1
Efficiency (%)	~76
Peak Gain (dBiC)	~4.5
Average Gain (dB)	~-1.1
Impendance (Ohm)	50
Axial Ratio (dB)	3 Max
Radiation Pattern	Hemispherical
Polarization	RHCP
Connector Type	SMA-Male Standard (Other Connectors Available)
Cable Length (m)	300cm Standard (Any Cable Length Available)
Cable Type	LMR100 Standard (Other Cables Available)

Antenna Measurement Conditions:

Free Space

150cm of Cable LL195

Measured in Certified CTIA 3D Anechoic Chamber

2. Mechanical and environmental specifications

Specifications	2J6726B
Mounting Type	Screw Mount
Dimensions (mm)	Ø 77.3 × 36.5
Max. Tighten Torque (Nm)	6 Nm
Randome Type	ABS or ASA
Randome Color	Black
Gasket	TPE
Antenna Base	Zamak
Operating Temperature (C)	-40 to +85
Storage Temperature (C)	-40 to +85
Certificates	Iridium Certified, IP67, IP69K, IK09
Substance Compliance	RoHS

3. Antenna parameters

Cable 1: IRIDIUM

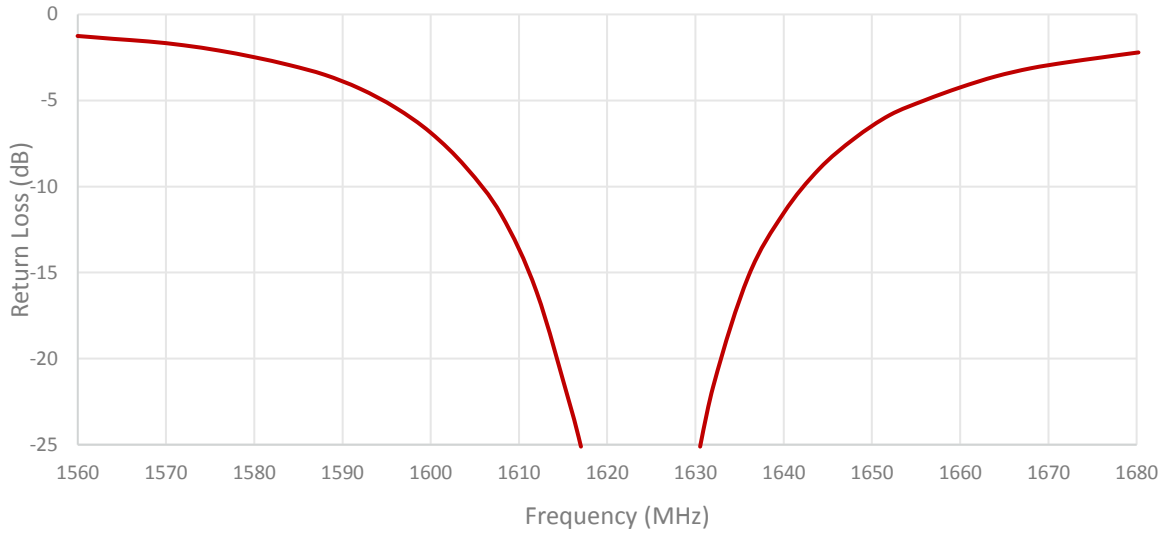

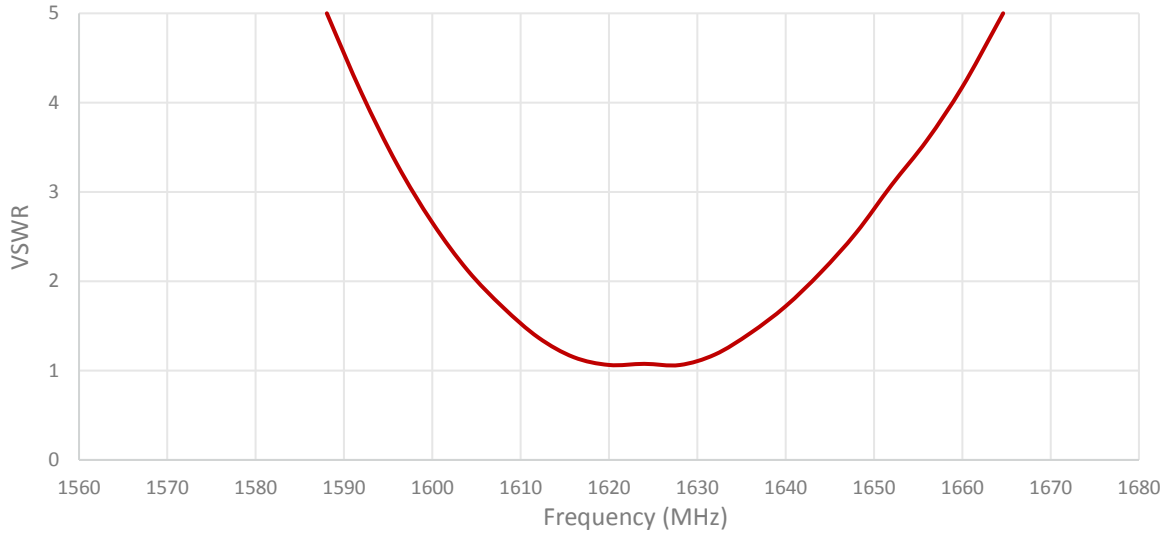

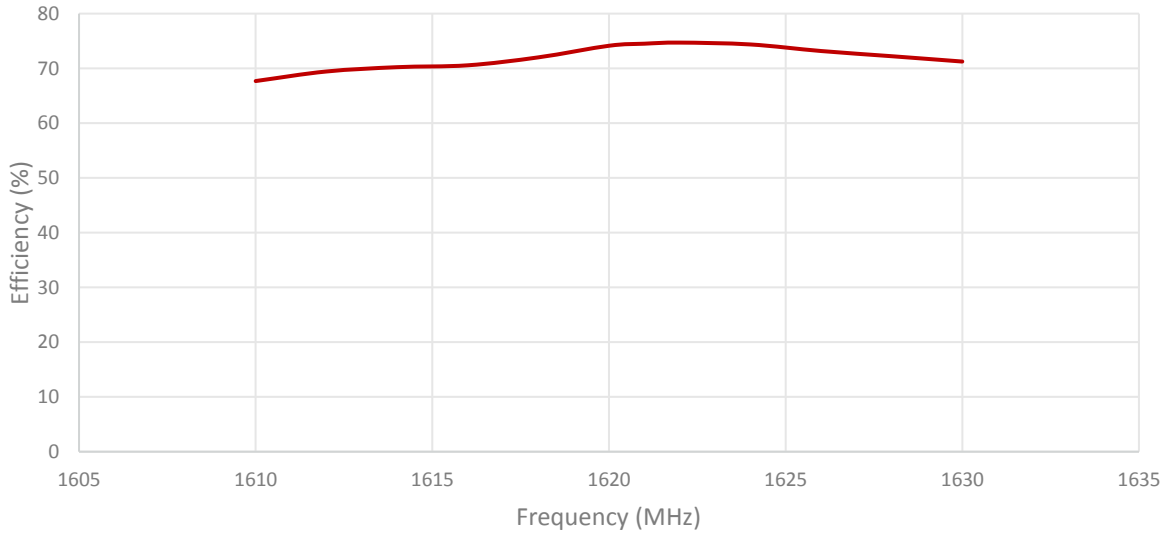
80
70
60
50
40
30
20
10
0
Efficiency (%)
1605
1610
1615
1620
1625
1630
1635
Frequency (MHz)

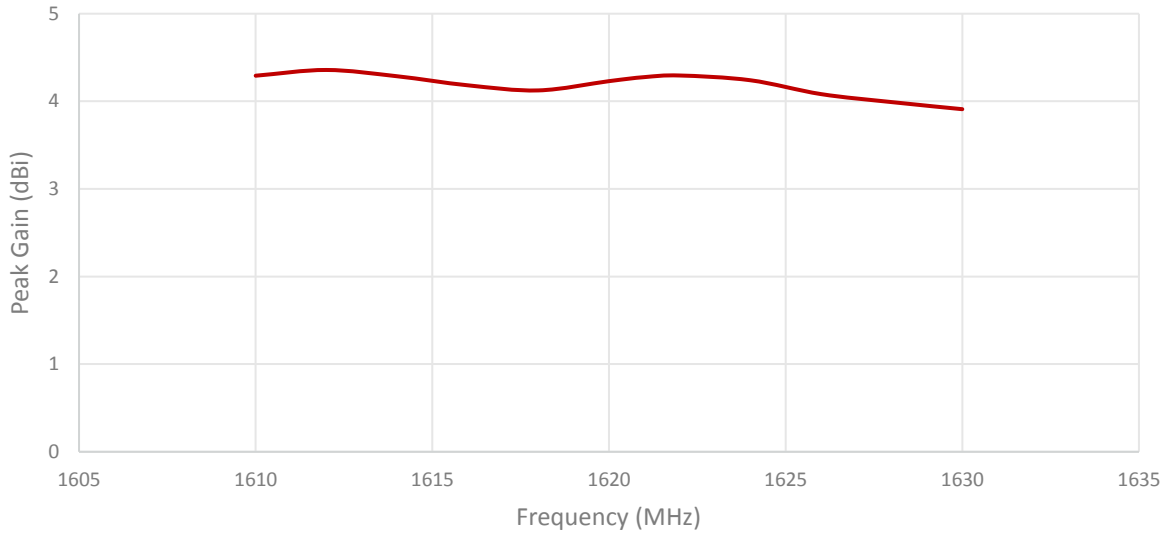
5
4
3
2
1
0
Peak Gain (dBi)
1605
1610
1615
1620
1625
1630
1635
Frequency (MHz)

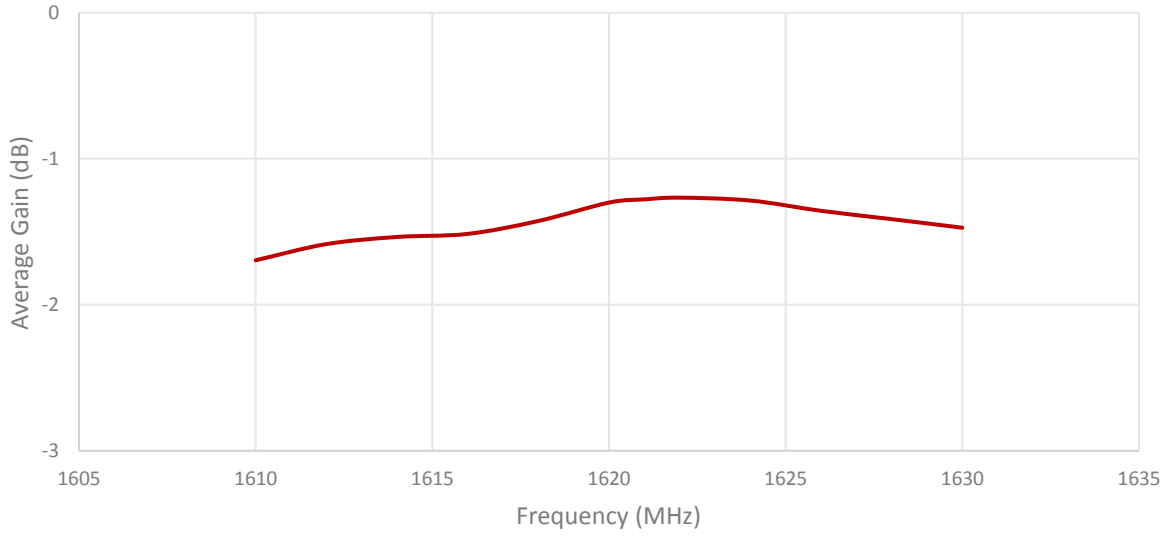
0
-1
-2
-3
Average Gain (dB)
1605
1610
1615
1620
1625
1630
1635
Frequency (MHz)

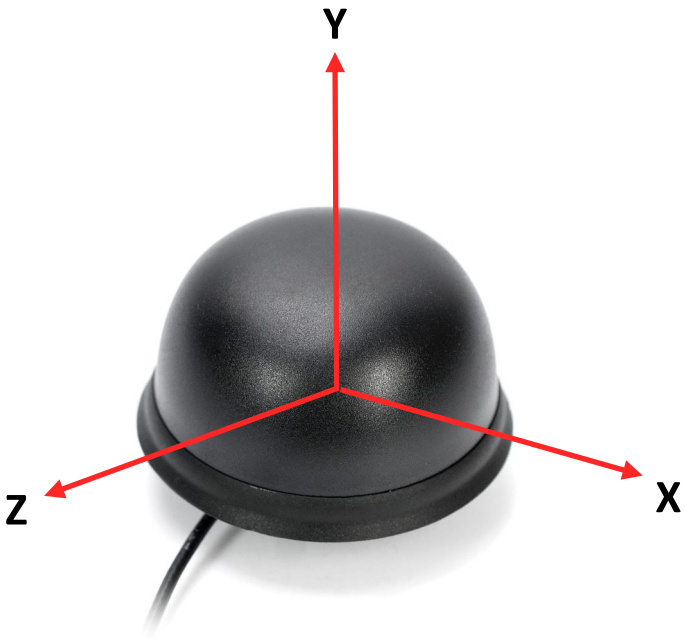

Radiation pattern reference

Cable 1: IRIDIUM

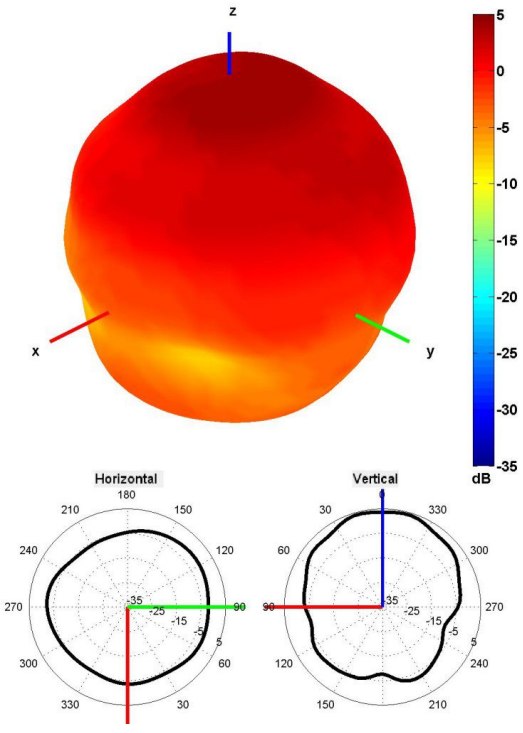

1621 MHz Radiation pattern

4. Antenna drawings

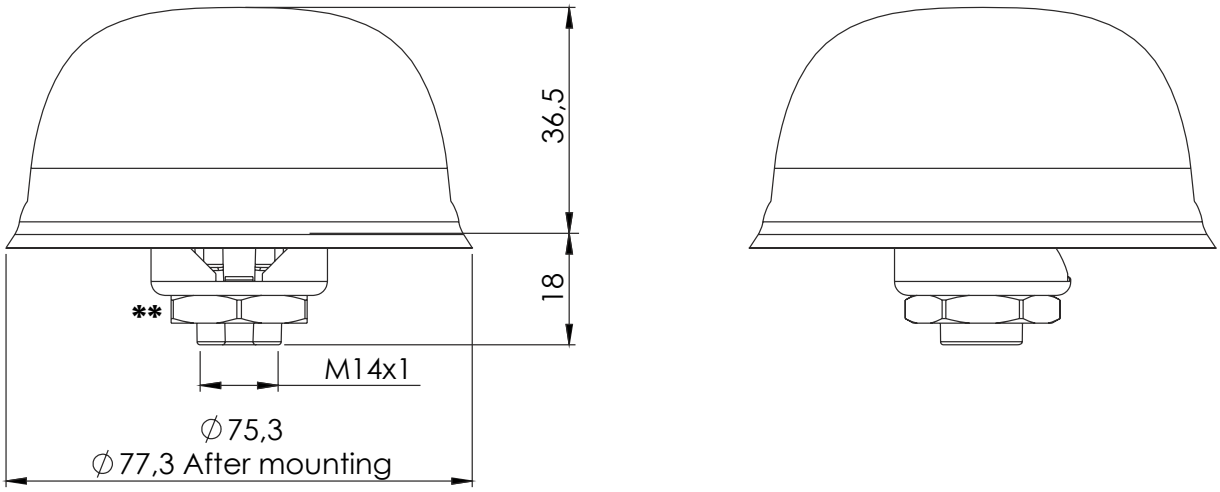

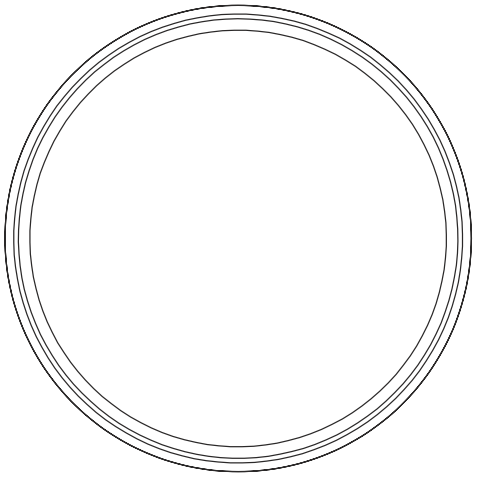

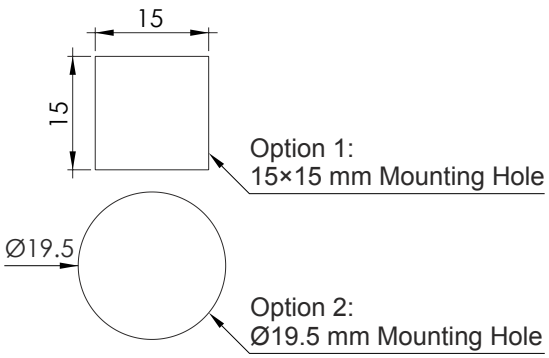

Note: Dimensions are in milimeters
***Dimensions are after mounting**
****Max. Torque= 6 Nm**

5. Antenna Images